nature biotechnology

Embryo-specific silencing of a transporter reduces phytic acid content of maize and soybean seeds

Jinrui Shi, Hongyu Wang, Kathleen Schellin, Bailin Li, Marianna Faller, Johan M Stoop, Robert B Meeley, David S Ertl, Jerry P Ranch & Kimberly Glassman

Phytic acid in cereal grains and oilseeds is poorly digested by monogastric animals and negatively affects animal nutrition and the environment. However, breeding programs involving mutants with less phytic acid and more inorganic phosphate (P_i) have been frustrated by undesirable agronomic characteristics associated with the phytic acid-reducing mutations. We show that maize *lpa1* mutants are defective in a multidrug resistance-associated protein (MRP) ATP-binding cassette (ABC) transporter that is expressed most highly in embryos, but also in immature endosperm, germinating seed and vegetative tissues. Silencing expression of this transporter in an embryo-specific manner produced low-phytic-acid, high-P_i transgenic maize seeds that germinate normally and do not show any significant reduction in seed dry weight. This dominant transgenic approach obviates the need for incorporating recessive *lpa1* mutations to create maize hybrids with reduced phytic acid. Suppressing the homologous soybean MRP gene also generated low-phytic-acid seed, suggesting that the strategy might be feasible for many crops.

© 2007 Nature Publishing Group http://www.nature.com/naturebiotechnology

Cereal grains and oilseeds contain large quantities of phytic acid, which provides *myo*-inositol and phosphorus required during seed germination and seedling establishment. Maize seed alone produces approximately 4.8 million metric tons of phytic acid annually around the globe[1]. Phytic acid has a negative impact on animal nutrition and the environment. The otherwise nutritionally adequate phosphorus content of cereal grains and oilseeds is bound in phytic acid and therefore not available to monogastric animals that lack sufficient phytase in their digestive tract for optimal phosphorus nutrition[2]. As a result, feed has to be supplemented with P_i to meet the phosphorus requirement for optimal animal growth. The undigested phytic acid excreted in animal waste is considered a leading source of phosphorus pollution from agriculture[3,4]. In addition, phytic acid reduces the bioavailability of essential mineral cations, such as Fe^{3+}, Zn^{2+} and Ca^{2+}, to animals and humans. Phytic acid also interacts with basic amino acids, seed proteins and enzymes in the digestive tract to form complexes that may reduce amino acid availability, protein digestibility and the activity of digestive enzymes[5–7].

Laboratory studies have demonstrated that transgenic pigs overexpressing a bacterial phytase use phytic acid–bound phosphorus with high efficiency and excrete less phosphorus in manure[8]. However, supplementing diets with P_i and adding microbial phytases to plant-based feed remain preferred approaches to managing poor phosphorus availability, despite the costs associated with producing the enzyme and the extra handling in feed processing and diet formulation. Loss of enzyme activity during storage also limits phytase application.

Another approach to addressing these nutritional and environmental problems involves reducing phytic acid levels in cereal grains and oilseeds. Low-phytic-acid (*lpa*) mutants, which accumulate P_i without a change in total phosphorus content, have been identified in all major crops[9]. Of the three known classes of maize *lpa* mutants, *lpa1* mutants have the lowest phytate levels. Approximately 75% of total phosphorus in seeds of maize *lpa1-1* is available to monogastric animals, compared with only 25% of that in wild-type seeds[7,10–12]. Depending on diet formulation, substitution of normal maize grain with *lpa1-1* maize seed reduces the phosphorus in manure by 10–85% (ref. 12–15). Nutritional studies with human subjects showed that *lpa1-1* maize improved Fe^{3+}, Zn^{2+} and Ca^{2+} bioavailability[16–18]. However, the failure of seeds of very strong *lpa1* alleles to germinate[9], the reduced seed weight associated with the *lpa1-1* allele[19] and the stunted vegetative growth and impaired seed development caused by the *lpa241* mutation[20] have limited the value of these maize mutants to breeders. Maize hybrids carrying *lpa1-1* and low-phytate barley cultivars showed a yield reduction[13,21] that is most likely associated with reduced seed dry weights and retarded vegetative growth, and soybean lines bred from a low-phytate mutant show poor germination and seedling establishment under field conditions[22].

We have identified the gene disrupted in maize *lpa1* mutants and shown how this opens the way for using transgenesis to specifically reduce phytic acid levels in phytate-accumulating seeds, while avoiding the undesired agronomic characteristics associated with known mutations. Tissue-specific downregulation of an MRP ABC transporter has considerable potential for enhancing the nutritional quality of maize and soybean seeds.

Crop Genetics Research and Development, Pioneer Hi-Bred International, A DuPont Company, Johnston, Iowa 50131, USA. Correspondence should be addressed to J.S. (Jinrui.shi@Pioneer.com).

Received 2 April; accepted 9 July; published online 5 August 2007; doi:10.1038/nbt1322

RESULTS

Cloning the *lpa1* gene

An indexed collection of transposon-mutagenized F_2 families derived from a variety of Mutator (Mu)-active stocks was screened for high-P_i phenotype[23,24]. Resulting high-P_i lines were crossed with homozygous *lpa1-1* to search for new allelic insertion mutations. Three independent *lpa1* mutants were identified in active Mu families and designated *lpa1-mum1*, *lpa1-mum2* and *lpa1-mum3*, respectively. Phytic acid was reduced by approximately 93% in putative knockout alleles and by about 62% in the *lpa1-1* mutant (**Fig. 1a,b**). The *lpa1* mutant seed accumulate *myo*-inositol; the *myo*-inositol content in the *lpa1-1* mutant seed was approximately 60% higher than that in wild-type controls (**Fig. 1c**).

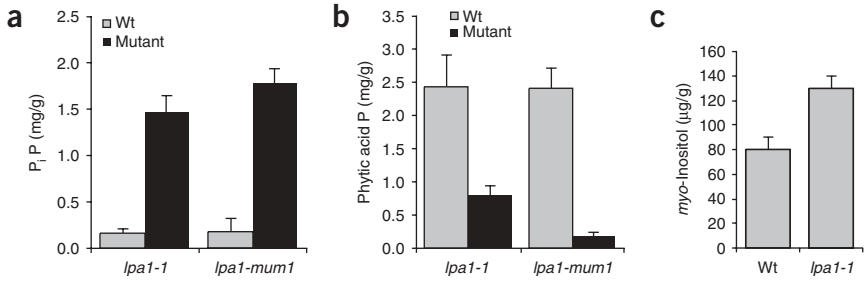

Figure 1 Seed inorganic phosphate, phytic acid and *myo*-inositol in the *lpa1-1* allele and *lpa1-mum1* knockout mutant. (**a**) Inorganic phosphate (P_i). (**b**) Phytic acid. (**c**) *myo*-Inositol. P_i and phytic acid are expressed as P_i phosphorus (P_i P) and phytic acid phosphorus (phytic acid P), respectively. The data represent the mean (±s.d.) of three segregating ears for each mutant.

Although initial efforts to clone the *lpa1* gene from *lpa1-mum1* using a PCR-based method[25] were unsuccessful, they enabled identification of a Mu insertion in a gene encoding a transcriptional activator protein (TAP). The gene was located ~1 cM from the *lpa1* locus and mapped to the terminal region of a clone named b167c.j1q from a bacterial artificial chromosome (BAC) library (**Fig. 2a**). The BAC was a member of a contig consisting of over 100 BACs derived from chromosome 1. For fine mapping, additional PCR markers, including p11, m1 and i9, were developed based on BAC end sequences (**Fig. 2a**). Genetic analysis showed that markers m1 and i9 flanked the *lpa1* locus. These markers are located on the overlapping BAC clones b156a.m1 and b149a.i9, respectively (**Fig. 2a**).

Sequencing the BAC clones b156a.m1 (~188 kb in length) and b149a.i9 (~140 kb) revealed nine putative open reading frames (ORFs). Two of the ORFs received particular attention because multiple expressed sequence tags (ESTs) were found for each in maize EST databases and some of the ESTs were from seed libraries. One of these ORFs encoded an ABC transporter and the other, ORF2, a protein with unknown function (**Fig. 2a**). Because *lpa1-mum1*, *lpa1-mum2* and *lpa1-mum3* were identified from active Mu families, we expected that a Mu element had been inserted into the *lpa1* gene in these mutants. Indeed, Mu insertions were identified at independent sites in exons of the ABC transporter gene, but not in ORF2, in all three *lpa1* alleles, providing strong evidence that the ABC transporter gene corresponds to the *lpa1* locus. In addition, interruption of the transporter gene by a Mu insertion co-segregated perfectly with the high-P_i and low-phytic-acid phenotype in the *lpa1-mum1* mapping population of 792 individuals. Moreover, as described below, suppression of the ABC transporter gene in T_1 and T_2 seeds recapitulated the phenotype of phytic acid reduction and P_i increase observed in *lpa1* mutants.

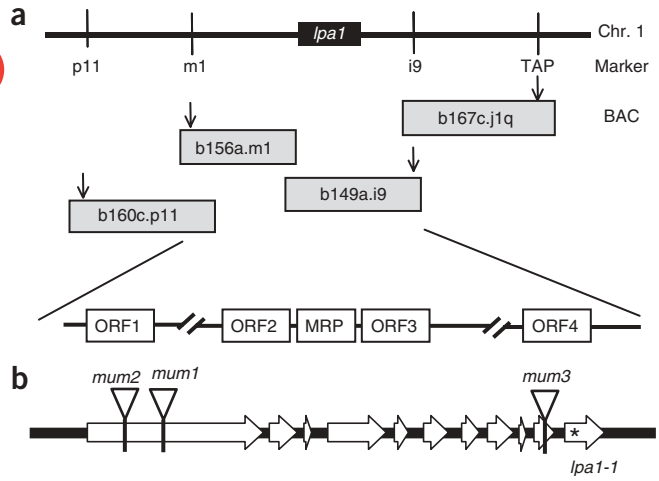

Figure 2 Map-based cloning and genomic structure of the *lpa1* gene. (**a**) Genetic and physical map of the *lpa1* locus. The *lpa1* locus maps on the short arm of chromosome 1. The TAP gene is closely linked with the *lpa1* locus. A BAC contig was identified by using the TAP marker. Other markers were developed based on BAC end sequences. The *lpa1* gene was identified in the BAC clone b149a.i9. (**b**) The *lpa1* gene encodes a MRP ABC transporter. Open arrow, exon; triangle, Mu transposon insertion site in three knockout mutants; asterisk, site of the mutated nucleotide in the *lpa1-1* mutant.

The maize *lpa1* gene encodes a MRP ABC transporter

The *lpa1* gene comprises 11 exons and encodes an MRP ABC transporter (**Fig. 2b**). The MRP protein has 1,510 amino acid residues and contains two copies of the modular structure consisting of an integral transmembrane domain and a cytosolic ATP-binding domain (GenBank accession number EF586878). The computer program TransMem predicted ten transmembrane spans in the first copy and four in the second copy. The ATP-binding domain contains several features common to all ABC transporters, such as the Walker A and B boxes and the ABC signature motif. As three maize MRP proteins have been reported previously[26], the MRP encoded by the *lpa1* gene was designated MRP4.

Maize *MRP4* is closely related to the *MRP5* gene of *Arabidopsis thaliana*[27]; they share the same exon-intron structure and 67% amino acid sequence identity. The rice homolog of maize *MRP4* is the *OsMRP13* gene[28]; the two share 83% nucleotide sequence identity and 91% amino acid identity.

The *lpa1-mum1* and *lpa1-mum2* mutants have a Mu transposon in the first exon at nucleotides GCCTGCATG (9-base-pair (bp) host site duplication) and TGCAGGCGG, respectively. In *lpa1-mum3*, a Mu element is inserted at nucleotides GTCTGTACC in exon 10 (**Fig. 2b**). Insertion of the Mu element interrupts *lpa1* gene expression; MRP4 transcripts were undetectable in homozygous Mu-insertion mutant seeds by RT-PCR, but present in wild-type control seeds (**Fig. 3a**). The *lpa1-1* mutant, which was isolated from an ethyl methanesulfonate–mutagenized population[19], carries an alanine-to-valine point mutation at amino acid position 1432. This amino acid is conserved in

© 2007 Nature Publishing Group http://www.nature.com/naturebiotechnology

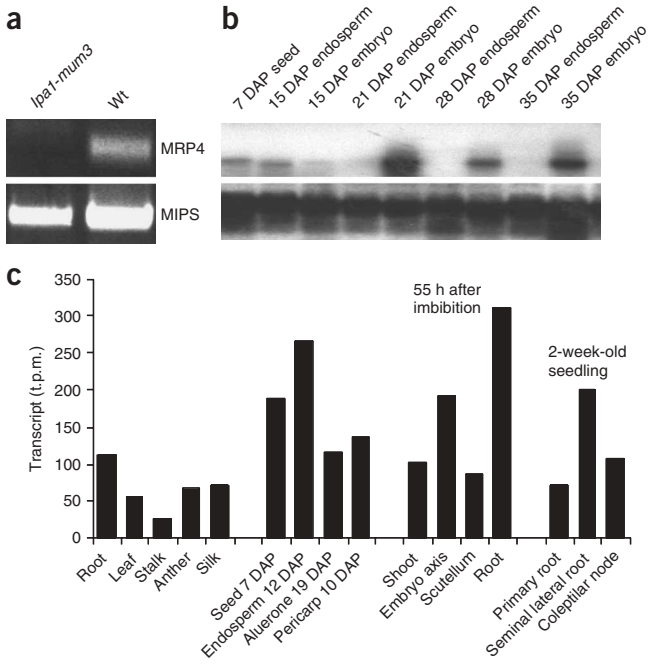

Figure 3 Expression of the *lpa1* gene. (**a**) Results of RT-PCR on mRNA of wild-type (Wt) and homozygous *lpa1-mum3* seeds. The expected 460-bp RT-PCR product was amplified with MRP4-specific primers from the wild type but not from *lpa1-mum3*. As positive controls, a 1,500-bp fragment of the gene encoding Ins(3)P synthase (*MIPS*) was amplified from both wild type and *lpa1-mum3*. (**b**) RNA gel blot analysis. Total RNA of maize inbred line B73 was separated on a 1% (wt/vol) agarose gel. After transfer, the blot was hybridized with the maize MRP4 cDNA probe. The blot probed with 18S rRNA is shown at bottom as a control for loading. Each lane contained 10 μg total RNA. DAP, days after pollination. (**c**) Signature sequencing analysis of *lpa1* transcript abundance. Transcript levels are expressed as tags per million (t.p.m).

MRP proteins and is located in the second ATP-binding domain. As all other amino acids of the *lpa1-1* MRP4 are identical to those of wild-type MRP4, it is very likely that this amino acid mutation accounts for the phenotype of the *lpa1-1* allele.

Expression of the maize *lpa1* gene

Northern analysis revealed that *lpa1* transcripts were detectable in the seeds 7 days after pollination (DAP) (**Fig. 3b**). Expression of the *lpa1* gene in embryos was observed at 15 DAP, peaked at 21 DAP and declined thereafter. The expression level in endosperm (including aleurone layer and pericarp) was higher than in embryos at 15 DAP, but decreased along with endosperm development. Almost no signal was detectable at 35 DAP (**Fig. 3b**).

Analysis of ESTs using massively parallel signature sequencing[29] revealed a broad expression pattern for *lpa1*, including roots, leaves, stalks, tassels, silks and developing seeds (**Fig. 3c**). The *lpa1* ESTs were found in 7 DAP seed and 12 DAP endosperm libraries, confirming northern blotting analysis (**Fig. 3b**). The *lpa1* gene was also expressed in germinating seeds and young seedlings (**Fig. 3c**). Expression of *lpa1* in vegetative tissues was relatively low, but detectable. As references, the expression levels of the maize 16-kDa oleosin (*Ole*) and globulin-1 (*Glb*) genes in 21 DAP embryos were 51,000 and 4,200 tags per million, respectively.

Impact of *lpa1* gene mutation on germination and seed weight

Although seeds homozygous for *lpa1* knockout alleles were indistinguishable in morphology and appearance from heterozygous and wild-type seeds in a segregating ear, they could not germinate under field conditions and in filter-paper germination tests. In contrast, the seeds of the point mutant *lpa1-1* germinated normally.

Seed dry weights of *lpa1* mutants were less than those of wild-type controls; the *lpa1-1* allele showed an average reduction of 4.9% and the *lpa1-mum1* knockout mutant 7.6% (see **Supplementary Table 1** online). The dry weights of the embryo and the 'rest-of-seed' fractions in *lpa1-1* seed were reduced to a similar extent and the ratio of the two fractions was unchanged.

Production of transgenic low-phytic-acid, high-P_i maize plants

The *Ole* and *Glb* promoters were chosen to make gene-silencing constructs to ensure that the *lpa1* expression would be suppressed only in embryos, where phytic acid is synthesized and accumulates in maize seeds. Twenty-one independent transformants were produced from the construct Ole::MRP4 (see **Supplementary Fig. 1** online) and 41 transformants from Glb::MRP4 (see **Supplementary Fig. 2** online). Approximately 80% of the transformants had the high-P_i phenotype. Reductions in phytic acid levels of 68–87% were associated with expression of Ole::MRP4 (**Fig. 4a–c**). This construct was made with a 5′-end fragment of the MRP4 cDNA. Another *Ole* promoter construct, in which the 5′-end fragment was replaced with a 3′-end fragment of the MRP4 cDNA, was also associated with very strong phenotypes (data not shown). Phenotypes of the Glb::MRP4 transformants were weaker than those of Ole::MRP4 transgenics: reductions in phytic acid levels ranged from 32% to 75% (**Fig. 4b,c**). The grain phenotype in progeny was stable in several independent transformants tested; the levels of phytic acid reduction and P_i increase were comparable among selfed, crossed and back-crossed seeds in each transgenic line. Like the *lpa1* mutant, the transgenic seed did not accumulate inositol phosphate (InsP) intermediates (data not shown).

Dry weights and germination rates of transgenic seeds

Normal germination and dry weight are critical features of low-phytic-acid lines of commercial value. Using segregating ears for seed dry weight analyses, we observed significant seed weight reduction in the T_1 seeds of four Ole::MRP4 transformants (**Fig. 4d**). However, the dry weight reduction associated with two other transformants (numbers 1 and 4) showing an ~70% reduction in phytic acid was not statistically significant (**Fig. 4c,d**). This was confirmed by analysis of T_2, F_1 and BC_2 seed (data not shown). The seed of these two transgenic lines germinated normally, with a frequency of about 90% in filter-paper germination tests. Germination of Ole::MRP4-expressors with >80% reduction in phytic acid content was delayed 1–2 d relative to wild-type seeds and the germination frequency ranged from 70% to 90%.

None of the Glb::MRP4 transformants had a statistically significant reduction in T_1 seed dry weight (**Fig. 4d**). Similar results were obtained in the analysis of F_1 and BC_2 seeds derived from five transformation events (**Table 1**). As an example, seed dry weights of individual ears from transformant 3 are presented in **Supplementary Figure 3** online. The ratio of embryo to endosperm dry weight was unchanged in the Glb::MRP4 transgenic seeds.

The germination frequency of homozygous Glb::MRP4 transgenic seeds was 95–100% in filter-paper germination tests. Under field conditions, the seeds from segregating ears (hemizygous/null = 1:1) produced glufosinate-resistant and glufosinate-susceptible seedlings that segregated 1:1, as expected (see **Supplementary Table 2** online).

© 2007 Nature Publishing Group http://www.nature.com/naturebiotechnology

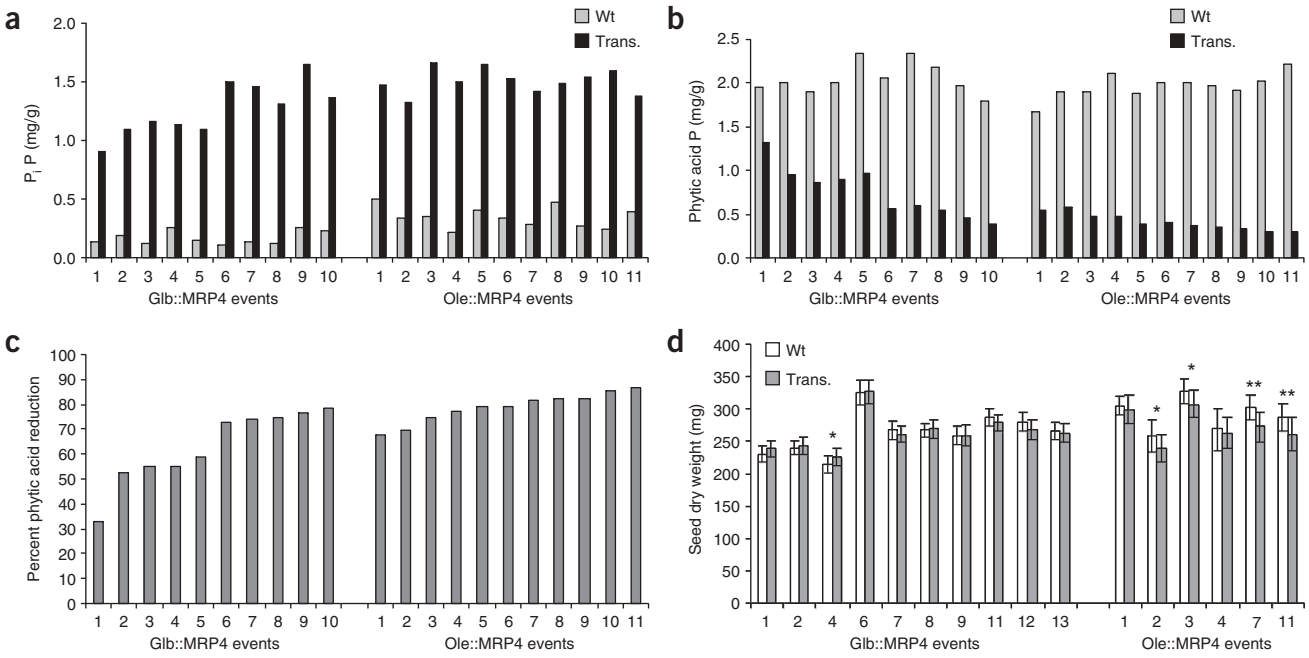

Figure 4 Phytic acid and inorganic phosphate contents and seed dry weight of T_1 transgenic seeds in which MRP4 expression is silenced. (**a**) Inorganic phosphate (P_i). (**b**) Phytic acid. (**c**) Percentage of phytic acid reduction. Ten individual T_1 seeds from each transformation event were assayed for P_i and phytic acid. The number of transgenic seeds ranged from 3 to 9. The data represent the mean of wild-type (Wt) or transgenic (Trans.) segregants. The P_i and phytic acid are expressed as P_i phosphorus (P) and phytic acid P, respectively. The transgenic lines are sorted by increasing phytic acid reduction. (**d**) Seed dry weight analysis. Individual T_1 seeds (120 kernels per transgenic line) were weighed and assayed for P_i content to distinguish transgenic from wild-type seed. The data represent the mean (±s.d.) of dry weight. Student's *t*-test was performed to compare the transgenic and wild-type segregant (*$P < 0.05$, **$P < 0.01$). Glb::MRP4 is the construct with the maize globulin-1 promoter and Ole::MRP4 is the construct with the maize 16-kDa oleosin promoter.

This demonstrates that the Glb::MRP4 transgenic and wild-type seeds have the same germination frequency. Resistance to the herbicide glufosinate in transgenic seedlings is conferred by transformation with the selectable marker moPAT, a maize-optimized phosphinothricin acetyltransferase.

To determine the effect of transgene expression on plant vegetative growth, seeds from segregating ears were planted in the field. The Glb::MRP4 transgenic and wild-type plants had no obvious differences in seedling vigor, leaf number, plant heights, or tasselling or silking times. The phenotype of delayed emergence and stunted growth, which was observed in the *lpa241* allele of the *lpa1* mutant[20], was not detected in the Glb::MRP4 transgenics.

Table 1 Seed dry weight analysis of Glb::MRP4 transgenics

Seed	No. of ears	Seed dry weight (mg) Wild-type	Transgenic	Dry weight reduction (%)	*t*-test *P* value
F_1	34	219.9 ± 34.6	218.6 ± 36.5	–0.60	0.089
BC_2	35	274.7 ± 35.8	274.5 ± 38.1	–0.08	0.872

F_1 seeds were produced by crossing heterozygous T_1 plants with wild-type inbred lines, and backcross 2 (BC_2) seeds by backcrossing two generations. Five transgenic lines were analyzed. The transgenic and wild-type seed segregated 1:1 in each ear. Individual seeds (150–200 kernels per ear) were weighed and assayed for P_i content to distinguish transgenic from wild-type seed. Average seed dry weight of each type within an ear was calculated to represent the ear. Seed dry weight reported here is the mean (±s.d.) of indicated number of ears analyzed. Student's *t*-test was performed to compare the transgenic and wild-type segregant.

Transgenic low-phytic-acid and high-P_i soybean

To determine whether the MRP gene can be used to reduce phytic acid and increase P_i content in other crops, the soybean homolog of maize *MRP4* was identified and its expression was suppressed using a gene-silencing construct (see **Supplementary Fig. 4** online) controlled by the soybean Kunitz trypsin inhibitor 3 (KTI3) promoter[30]. Of 23 independent soybean transgenics, 14 showed increased P_i levels. Selected transformants were analyzed quantitatively for P_i and phytic acid content. The transgenic seed typically showed a 15–30-fold increase in P_i (**Fig. 5a**) and a 37–90% reduction in phytic acid (**Fig. 5b,c**).

DISCUSSION

Cloning the maize *lpa1* gene has enabled us to suppress *lpa1* gene expression in an organ-specific manner by using a gene-silencing construct containing a maize embryo-specific *Glb* promoter[31]. The resulting low-phytic-acid, high-P_i transgenic seeds germinate normally, and have no significant reduction in seed weight. Limiting suppression of the *lpa1* gene to the grain is critical because *lpa1* is also expressed in vegetative tissues and disrupting its expression in the mutant decreases vegetative growth[20]. That, in turn, could reduce yield potential. Transgenic plants were indistinguishable from segregating wild-type plants in the field, supporting our expectation that vegetative expression of *lpa1* was unimpaired in the transgenics.

The *Ole* promoter construct produced the strongest phenotypes, with phytic acid reduced by ~85%. The seed dry weight was reduced and germination impaired in some transgenic lines. Apparently, the Ole::MRP4 construct can reduce MRP4 transcripts to levels low enough to affect embryo development and reduce germination rate

© 2007 Nature Publishing Group http://www.nature.com/naturebiotechnology

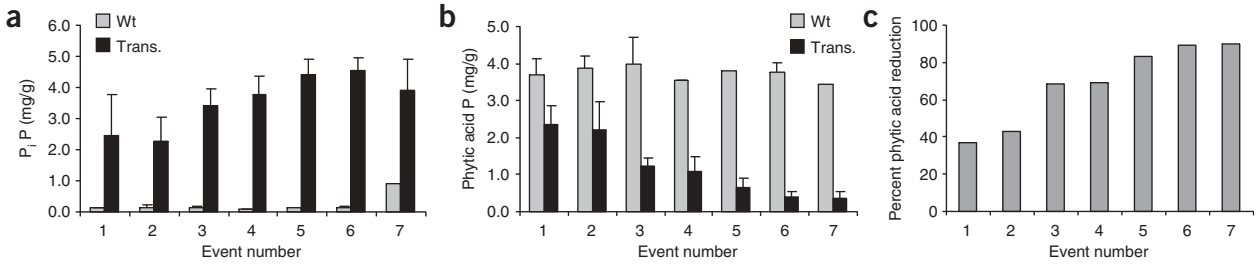

Figure 5 Phytic acid reduction and inorganic phosphate increase in T_1 transgenic seeds of soybean lines with silenced MRP expression. (**a**) Inorganic phosphate (P_i). (**b**) Phytic acid. (**c**) Percentage of phytic acid reduction. Eight individual T_1 seeds from each transgenic line were assayed for P_i and phytic acid. The number of transgenic seeds ranged from 4 to 7. The data represent the mean of wild-type (Wt) or transgenic (Trans.) segregants. The P_i and phytic acid are expressed as P_i phosphorus (P) and phytic acid P, respectively. The soybean transgenic lines are sorted by increasing phytic acid reduction.

© 2007 Nature Publishing Group http://www.nature.com/naturebiotechnology

and frequency. Reductions in phytic acid levels in Glb::MRP4 transformants were not associated with significant decreases in seed dry weights. This may be due to reduced activity of the *Glb* promoter relative to the *Ole* promoter (approximately tenfold lower) or to different temporal and spatial expression patterns[31].

The seed weight reduction in the *lpa1* mutant is mainly caused by endosperm loss. The *lpa1* mutation disrupts phytic acid metabolism in embryo and aleurone cells[32]. It is possible that an impaired embryo alters the development and filling of endosperm through embryo-endosperm communications. However, as changes in the phosphorus profiles associated with the Glb::MRP4 construct resembled those observed in the *lpa1-1* mutant, but were not associated with reduced endosperm weight, the *lpa1* mutation would seem to have a direct impact on endosperm. Accordingly, the *lpa1* gene is expressed in developing endosperm. Disruption of phytic acid metabolism may elevate the P_i concentration in endosperm cells, as in the embryo. P_i is a known inhibitor of starch biosynthesis enzymes[33], and the attenuated starch synthesis could lead to endosperm weight reduction. Another possible explanation is that the endosperm weight reduction is unrelated to a disruption of phytic acid metabolism and that the MRP4 gene has other, as yet unknown, functions in endosperm. The seed weight loss in the Ole::MRP4 transformants with the strongest phenotypes likely results from *lpa1* gene silencing in endosperm because the *Ole* promoter has some activity in developing endosperm tissues[34].

It is not immediately clear how the maize MRP4 regulates phytic acid metabolism. The increase in *myo*-inositol content in *lpa1* seeds (**Fig. 1c**) indicates that the *myo*-inositol supply for phytic acid biosynthesis is not affected. The lack of InsP intermediate accumulation suggests that the *lpa1* mutation does not impair InsP kinases[19]. The *lpa1* mutation may limit the phosphate supply to *myo*-inositol and InsP kinases and therefore deprive the kinases of substrate. Another possibility is that the MRP ABC transporter affects phytic acid transport and compartmentalization. Accumulation of phytic acid in the cytosol may reduce its biosynthesis through a negative-feedback mechanism. Electron microscopy suggests that phytic acid is synthesized in the cytosol, transported into the endoplasmic reticulum lumen, and moved in endoplasmic reticulum–derived vesicles to protein storage vacuoles[35,36]. The maize MRP4 transporter may function directly or indirectly in removing phytic acid from the cytosol or in vesicle trafficking.

In developing seeds, phytic acid is synthesized from glucose-6-phosphate, which is converted to *myo*-inositol 3-phosphate (Ins(3)P) by Ins(3)P synthase (MIPS). Dephosphorylation of Ins(3)P produces *myo*-inositol. Stepwise phosphorylation of *myo*-inositol and Ins(3)P leads to phytic acid. Mutation and silencing of genes in this pathway also can produce low-phytic-acid, high-P_i seed. However, suppressing MIPS expression also depletes *myo*-inositol and impairs seed germination. The 30–35% reductions in phytic acid contents of knockout mutants of the maize Ins(1,3,4)P_3 5/6-kinase gene[24] and *Arabidopsis IPK2β* gene[37] are inadequate to develop commercially viable lines. To deliver meaningful nutritional and environmental benefits, cereal grains and oilseeds should have phytic acid reduced by at least 50% and P_i increased commensurately. The *Arabidopsis ipk1* mutant does not accumulate P_i and most of its phosphorus is still bound in inositol tetrakisphosphate and pentakisphosphate ($InsP_4$ and $InsP_5$) intermediates[37]. Although the intermediate InsP content is significantly reduced in the *Arabidopsis ipk1 ipk2*β double mutant, silencing the maize homologous genes produced low-phytic-acid maize seed that still accumulate a fair amount of $InsP_4$ and $InsP_5$ (J.S., H.W., K.S., J.R. & K.G., unpublished data). In contrast to the pathway genes, the *lpa1* gene allows simple genetic manipulation of a single gene to generate seeds with phytic acid reduction and commensurate P_i increase high enough to make commercially viable products. The MRP transgenic seeds have no significant seed weight reduction or germination problems and the profile of InsP intermediates is not changed. These features are desirable from both agronomic and regulatory perspectives.

METHODS

Genetic screen for new maize *lpa1* mutants. An indexed collection of transposon-mutagenized F_2 seeds derived from a variety of Mu-active stocks was screened for increased P_i using a high-throughput P_i assay, as described previously[23,24]. The candidate high-P_i lines were analyzed for the phytic acid content, totaling 130 individual lines. Segregating individuals from confirmed *lpa* lines were crossed with the homozygous *lpa1-1* mutant and resulting F_1 seeds were evaluated for high P_i as described[23,24]. Allelic mutations were identified among lines producing high P_i in F_1 test crosses.

Determination of *myo*-inositol, P_i and phytic acid. *myo*-Inositol, P_i and phytic acid in seeds were quantified as described[23,24]. Rapid qualitative analysis for increased seed P_i was carried out according to a procedure previously described[24].

Map-based cloning. The BAC library was previously constructed with genomic DNA of maize inbred Mo17, BAC end sequences were determined and a contig map was constructed as described (K.A. Fengler, M.L. Faller, B.C. Meyers, M. Dolan, S.V. Tingey and M. Morgante, Plant & Animal Genome VIII Conference, 9–12 January 2000, San Diego, California, USA; http://www.intl-pag.org/pag/8/abstracts/pag8265.html). A segregating population consisting of 1,000 F_1 seeds was produced by crossing the homozygous *lpa1-1* mutant with the heterozygous *lpa1-mum1* knockout plants. The TAP gene, which is

closely linked to the *lpa1* locus, has a Mu insertion in the *lpa1-mum1* line, and the Mu insertion was identified using a PCR-based method for cloning Mu-tagged genes as described[25]. The BAC clone that contains the TAP gene was identified by comparing the TAP DNA sequence with the terminal sequence of the clones from the BAC library. For genetic mapping, the TAP locus was genotyped by PCR using the TAP gene-specific primer (5′-TGATCACAACAGG CACCTCCGC-3′) and the Mu terminal inverted repeat (TIR) primer (5′-AGA GAAGCCAACGCCA(A/T)CGCCTC(C/T)ATTTCGTC-3′). Other markers were developed based on BAC end sequences. The deletion-insertion marker i9 was from the BAC clone b149a.i9, and different alleles could be recognized by the sequence of a 450-bp PCR product (primer 5′-GGTGATGATGCAATGCAA TACGCGC-3′ and 5′-CCCTTGAGGGAGATCGAATCCAAAAC-3′). The m1 marker was derived from the BAC clone b156a.m1 and had multiple polymorphic nucleotides within a region of 450 bp (primer 5′-AACTTAGCA TAATCCTCCATAGCTTGC-3′ and 5′-GATCATCCTCTGAAAGTCTATTACA GA-3′). The single nucleotide polymorphism marker p11 was developed from the BAC clone b160c.p11. Two BAC clones were sequenced and assembled according to a published procedure[38]. A maize-trained version of the program FGENESH (Softberry) was used for prediction of potential protein-coding regions. The BAC sequence was also used for BLAST search against publicly available maize EST databases to determine the expression of putative ORFs. To identify the *lpa1* gene, 12 primers specific to the ABC transporter gene and 8 specific to ORF2 were synthesized. The gene-specific primer was matched with one specific to the Mu TIR for PCR using genomic DNA from *lpa1-mum1* as template. The Mu insertion sites in *lpa1-mum1, lpa1-mum2* and *lpa1-mum3* mutant were mapped by PCR-amplifying the junction region and then sequencing the PCR products.

Gene expression. For gene expression analysis by massively parallel signature sequencing, 17-mer sequence tags of 1–2 million cDNA molecules from a library were sequenced[29]. The frequency of a specific 17-mer sequence reflects the expression level of the gene in the tissue from which the library was constructed. The mRNA from a variety of maize tissue samples was isolated from inbred line B73. Library construction and sequencing of the transcript signature sequence tag was performed by Lynx Therapeutics as described[29]. Each sequence tag contains 17 bp, including and following downstream of the most 3′ *Sau*3A site (GATC) of a gene transcript. The 17-mer sequence specific for the *lpa1* transcript is 5′-GATCATCCGCAGTGAAT-3′, located 540 bp upstream from the 3′ terminus. The EST of the *lpa1* transcript was quantified and reported on the basis of tags per million in a library.

For northern blot analysis, total RNA from immature seeds and seed parts were prepared using the Purescript RNA isolation kit (Gentra). Ten micrograms of RNA were resolved on a 1% (wt/vol) agarose/formaldehyde/MOPS gel and transferred to a nylon membrane. A 558-bp DNA fragment amplified from the 3′ end of the MRP4 cDNA (primer 5′-ACATTGTTTGAGGGTACTATCA GAATG-3′ and 5′-ACATTGTTTGAGGGTACTATCAGAATG-3′) was used as probe. Probe labeling, hybridization and washing were carried out according to the manufacturer's instructions.

RT-PCR analysis was performed using total RNA isolated from wild-type and *lpa1-mum3* homozygous seeds. First-strand cDNA was generated with oligo(dT) as the primer using SuperScript II RNase H^- reverse transcriptase (Invitrogen Life Technologies) according to the manufacturer's instructions. PCR was conducted using the Advantage-GC 2 PCR kit (Clontech). The primers used were MRP4 forward (5′-ACATTGTTTGAGGGTACTATCAGAA TG-3′) and reverse (5′-GCAAGCATGGCAGATACGGGCTATTTG-3′), generating a product of 460 bp, and *MIPS* forward (5′-CTCGCTACCTCGCTTCGCAT TCCATT-3′) and reverse (5′-CTCTGCTTGGCCAGAGCGTTCCA-3), producing a fragment of 1,500 bp.

Maize transformation and transgenic plant analysis. Maize transformation vectors have the plasmid backbone of super binary vector pSB1 (ref. 39). The T-DNA region contains the selectable maker moPAT for transgenic plant selection and a gene-silencing cassette for suppressing the *lpa1* expression. The Ubi::moPAT::PinII expression cassette consists of the maize ubiquitin-1 promoter (Ubi, including the 5′-untranslated region and first intron, nucleotides 7–1988, from ref. 40), the moPAT gene (US patent no. 6,096,947) and potato PinII terminator (nucleotides 2–310, from ref. 41). The *lpa1* gene-silencing cassette in the construct PHP22836 (Ole::MRP4) contains the maize *Ole* promoter (GenBank no. BD235503, including the 81-bp 5′-untranslated region of oleosin, U13701), a 1,010-bp fragment (reverse direction) from the 5′ end of the MRP4 cDNA (nucleotides 407–1416, EF586878), the maize *Adh1* intron 1 (nucleotides 35–571, AF050457) as a spacer and a 1,157-bp fragment (forward direction) of the MRP4 cDNA (nucleotides 403–1559, EF586878). The MRP fragments and the spacer form an inverted repeat structure. The MRP4 gene-silencing cassette has no terminator. Intermediate plasmids (modified pBluescript, Stratagene) were used to add cloning restriction sites to each fragment. The four fragments were ligated into an intermediate plasmid which contains Gateway (Invitrogen) ATT L1 and ATT L2 recombinational cloning sites. Gateway technology was then used to move the MRP4 gene-silencing cassette and the Ubi::moPAT::PinII selectable marker into a Gateway-modified derivative of pSB11 (see ref. 39) to form PHP22829. This plasmid was then transferred by electroporation into *Agrobacterium tumefaciens* LBA4404 cells carrying the super binary pSB1 plasmid to generate the final maize transformation vector PHP22836 (see **Supplementary Fig. 1** for T-DNA structure and sequence). The Glb::MRP4 construct (PHP22894) was created in a similar manner. The gene-silencing cassette contains the maize *Glb* promoter (L22344, ref. 42). A 985-bp *Sal*I/KspI fragment from a partial MRP4 cDNA clone (nucleotides 3575–4547, EF586878) was ligated into pSPORT (Invitrogen) to flank the fragment with convenient restriction sites. These sites were used to create the two arms of the inverted repeat: *Bam*HI/*Sma*I (1,037 bp) and *Hin*dIII/*Xma*I (1,041 bp). *Adh1* intron 1 was again used as spacer between the two arms, this time as a *Hin*dII/*Xma*I 553-bp fragment. These three fragments were ligated simultaneously into an intermediate vector that contains the *Glb* promoter to form the *Glb* promoter-MRP4 gene-silencing cassette in the final transformation vector PHP22894. The T-DNA structure and sequence of PHP22894 is presented in **Supplementary Figure 2**.

Maize transformants were produced by using *Agrobacterium*-mediated transformation as described[43]. T_0 plants were self-pollinated or crossed with non-transgenic inbred lines to produce T_1 seeds. T_1 plants were self-pollinated to produce T_2 seeds or crossed with wild-type inbred lines to produce F_1 seeds. Backcrossing was performed to produce BC_1, BC_2 and BC_3 seeds. For initial screening, ten individual T_1 seeds per transformant were assayed qualitatively for P_i increase. Quantitative phytic acid and P_i analysis were also conducted with ten individual T_1 seeds per transformant.

Seed dry weight analysis was carried out with segregating ears. Kernels were dried at 65 °C. Individual seeds were weighed and then assayed for P_i content to distinguish transgenic from wild-type seed. For T_1 seeds, 120 kernels per ear were analyzed; for F_1 and backcrossed seeds, 150–200 kernels per ear were analyzed.

Germination tests. Homozygous seeds were placed in a row between two layers of filter paper wetted with distilled water. The filter paper was rolled up with a piece of waxed paper on the outside, placed in a beaker with 1 inch (2.5 cm) of distilled water at the bottom and maintained in a growth chamber at 25 °C constant temperature with 12-h photoperiods. Seed germination was evaluated 5 d after seeding.

The germination test in the field conditions was carried out with backcrossed ears which segregated 1:1 for transgenic and wild-type seeds. Seeds were planted in a nursery in Hawaii. The herbicide glufosinate was applied at a rate of 750 g of active ingredient per acre when the seedlings had 2–4 leaf nodes. Herbicide-resistant and herbicide-susceptible seedlings were scored 7 d after spraying.

Soybean transformation. Soybean transformation vector contained a hygromycin B phosphotransferase gene under the control of the cauliflower mosaic virus 35S promoter for plant selection. Bacterial selection is conferred by a second hygromycin B phosphotransferase gene under the control of the T7 RNA polymerase promoter[44]. The soybean MRP silencing construct consists of the soybean KTI3 promoter[30] and an inverted repeat structure derived from a 556-bp fragment of soybean MRP cDNA with an 890-bp DNA fragment as a spacer. The MRP gene-silencing construct had no terminator. The soybean MRP 556-bp fragment was amplified by standard PCR methods using the primer set 5′-ATCGTCGACGCGGCCGCTGAGAGAATTTATCAGTA CAGGAT-3′ and 5′-ATGGCGGCCGCCTAGGCGTACGTTACTGCAGCAGAG CTCGGCCCAG-3′. The oligonucleotide primers were designed to add *Not*I

© 2007 Nature Publishing Group http://www.nature.com/naturebiotechnology

and *Sal*I sites at the 5′ end and *Bsi*WI and *Avr*II sites and a stop codon (TAA) at the 3′ end. To make the spacer DNA, a 470-bp DNA fragment of the soybean *FAD2-1* and a 420-bp fragment of *FAD2-2* (see ref. 45) were amplified by PCR, ligated and cloned into the plasmid pGEM-T Easy (Promega). The spacer DNA fragment was reamplified by PCR to add a *Bsi*WI site to the 5′ end and an *Avr*II site to the 3′ end. The soybean transformation plasmid pJMS33 was assembled as follows. Plasmid pKS126 (containing the KTI3 promoter; see US patent 20,040,172,682 for plasmid construction) was digested with *Not*I and *Sal*I, and the 7,350-bp vector DNA fragment was gel purified. The PCR product of the MRP 556-bp fragment was digested with *Not*I and *Bsi*WI, as well as with *Sal*I and *Avr*II. The spacer DNA was prepared by *Bsi*WI and *Avr*II digestion. These four fragments were ligated together to form pJMS33 (see **Supplementary Fig. 4** for sequence).

Soybean transformants were produced by using particle bombardment of somatic embryos (cv. Jack) as described[46]. Transgenic embryos were selected and propagated to maturity, and plants were regenerated from matured somatic embryos as described[44]. Transgenic soybean plants were grown in Metromix 360 soil (Sun Grow Horticulture) in a growth chamber at 25 °C constant temperature with 16-h photoperiods to produce T_1 seeds.

Accession number. Maize MRP4 cDNA: GenBank accession no. EF586878.

Note: Supplementary information is available on the Nature Biotechnology website.

ACKNOWLEDGMENTS
The *lpa1-1* mutant was kindly provided by V. Raboy (USDA-ARS, National Small Grain Germplasm Research Facility, Aberdeen, ID). BAC clone sequencing and assembly was conducted by Pioneer Crop Genetics Research and Development sequencing laboratory. We thank Jan Hazebroek, Jessica Holland, Ryan Wally and Lisa Hagen for technical assistance, Russ Booth and Cheryl Caster for soybean transformation, and Doug Nubel, Marjorie Rudert, Shifu Zhen and Andrew Waber for assistance in the field and the greenhouse. We are grateful to Mitchell Tarczynski, Rudolf Jung and Bill Hitz for discussions.

AUTHOR CONTRIBUTIONS
J.S. conceived and directed the project, wrote the manuscript and identified the *lpa1-mum1* mutant; H.W. performed molecular characterization of MRP4; K.S. analyzed the maize transgenic lines with supervision by J.S.; B.L. identified the TAP marker; J.M.S. constructed the soybean transformation vector and analyzed the soybean transformants; J.P.R. generated the maize transgenic lines; K.G. constructed the maize transformation vectors; H.W., J.S., R.B.M. and D.S.E. identified the *lpa1* Mu insertion alleles; J.S., B.L., M.F., H.W. and K.S. performed fine mapping and cloning.

COMPETING INTERESTS STATEMENT
The authors declare no competing financial interests.

Published online at http://www.nature.com/naturebiotechnology/
Reprints and permissions information is available online at http://npg.nature.com/reprintsandpermissions

1. Lott, J.N.A., Ockenden, I., Raboy, V. & Batten, G.D. Phytic acid and phosphorus in crop seeds and fruits: a global estimate. *Seed Sci. Res.* **10**, 11–33 (2000).
2. Nelson, T.S., Shieh, T.R., Wodzinski, R.J. & Ware, J.H. The availability of phytate phosphorus in soybean meal before and after treatment with a mold phytase. *Poult. Sci.* **47**, 1842–1848 (1968).
3. Cromwell, G.L. & Coffey, R.D. Phosphorus—a key essential nutrient, yet a possible major pollutant—its central role in animal nutrition. in *Biotechnology in the Feed Industry* (ed. Lyons, T.P.) 133–145 (Alltech Tech Publishers, Nicholasville, Kentucky, USA, 1991).
4. Corell, D.L. The role of phosphorus in the eutrophication of receiving waters: a review. *J. Environ. Qual.* **27**, 261–266 (1989).
5. Selle, P.H., Ravindran, V., Bryden, W.L. & Scott, T. Influence of dietary phytate and exogenous phytase on amino acid digestibility in poultry: a review. *J. Poult. Sci.* **43**, 89–103 (2006).
6. Reddy, N.R., Pierson, M.D., Sathe, S.K. & Salunkhe, D.K. Nutritional consequences of phytates. in *Phytates in Cereals and Legumes* (eds. Reddy, N.R., Pierson, M.D., Sathe, S.K. & Salunkhe, D.K.) 81–110 (CRC Press, Inc., Boca Raton, Florida, USA, 1989).
7. Bohlke, R.A., Thaler, R.C. & Stein, H.H. Calcium, phosphorus, and amino acid digestibility in low-phytate corn, normal corn, and soybean meal by growing pigs. *J. Anim. Sci.* **83**, 2396–2403 (2005).
8. Golovan, S.P. *et al.* Pigs expressing salivary phytase produce low-phosphorus manure. *Nat. Biotechnol.* **19**, 741–745 (2001).
9. Raboy, V. Seeds for a better future: 'low phytate' grains help to overcome malnutrition and reduce pollution. *Trends Plant Sci.* **6**, 458–462 (2001).
10. Li, Y.C., Ledoux, D.R., Veum, T.L., Raboy, V. & Ertl, D.S. Effects of low phytic acid corn on phosphorus utilization, performance, and bone mineralization in broiler chicks. *Poult. Sci.* **79**, 1444–1450 (2000).
11. Spencer, J.D., Allee, G.L. & Sauber, T.E. Phosphorus bioavailability and digestibility of normal and genetically modified low-phytate corn for pigs. *J. Anim. Sci.* **78**, 675–681 (2000).
12. Jang, D.A. *et al.* Evaluation of low-phytate corn and barley on broiler chick performance. *Poult. Sci.* **82**, 1914–1924 (2003).
13. Ertl, D.S., Young, K.A. & Raboy, V. Plant genetic approaches to phosphorus management in agricultural production. *J. Environ. Qual.* **27**, 299–304 (1998).
14. Sugiura, S.H., Raboy, V., Young, K.A., Dong, F.M. & Hardy, R.W. Availability of phosphorus and trace minerals in low-phytate varieties of barley and corn for rainbow trout (*Oncorhynchus mykiss*). *Aquaculture* **170**, 285–296 (1998).
15. Sands, J.S. *et al.* Phosphorus bioavailability, growth performance, and nutrient balance in pigs fed high available phosphorus corn and phytase. *J. Anim. Sci.* **79**, 2134–2142 (2001).
16. Mendoza, C. *et al.* Effect of genetically modified, low-phytic acid maize on absorption of iron from tortillas. *Am. J. Clin. Nutr.* **68**, 1123–1128 (1998).
17. Hambidge, K.M. *et al.* Zinc absorption from low-phytate hybrids of maize and their wild-type isohybrids. *Am. J. Clin. Nutr.* **79**, 1053–1059 (2004).
18. Hambidge, K.M. *et al.* Absorption of calcium from tortilla meals prepared from low-phytate maize. *Am. J. Clin. Nutr.* **82**, 84–87 (2005).
19. Raboy, V. *et al.* Origin and seed phenotype of maize *low phytic acid 1–1* and *low phytic acid 2–1*. *Plant Physiol.* **124**, 355–368 (2000).
20. Pilu, R., Landoni, M., Cassani, E., Doria, E. & Nielsen, E. The maize *lpa241* mutation causes a remarkable variability of expression and some pleiotropic effects. *Crop Sci.* **45**, 2096–2105 (2005).
21. Bregitzer, P.P. & Raboy, V. Effects of four independent low-phytate mutations on barley (*Hordeum vulgare* L.) agronomic performance. *Crop Sci.* **46**, 1318–1322 (2006).
22. Meis, S.J., Fehr, W.R. & Schnebly, S.R. Seed source effect on field emergence of soybean lines with reduced phytate and raffinose saccharides. *Crop Sci.* **43**, 1336–1339 (2003).
23. Shi, J., Wang, H., Hazebroek, J., Ertl, D.S. & Harp, T. The maize *low-phytic acid 3* encodes a *myo*-inositol kinase that plays a role in phytic acid biosynthesis in developing seeds. *Plant J.* **42**, 708–719 (2005).
24. Shi, J. *et al.* The maize low-phytic acid mutant *lpa2* is caused by mutation in an inositol phosphate kinase gene. *Plant Physiol.* **131**, 507–515 (2003).
25. Muszynski, M.G. *et al. Delayed flowering1* encodes a basic leucine zipper protein that mediates floral inductive signals at the shoot apex in maize. *Plant Physiol.* **142**, 1523–1536 (2006).
26. Goodman, C.D., Casati, P. & Walbot, V. A multidrug resistance-associated protein involved in anthocyanin transport in *Zea mays*. *Plant Cell* **16**, 1812–1826 (2004).
27. Gaedeke, N. *et al.* The *Arabidopsisthaliana* ABC transporter AtMRP5 controls root development and stomata movement. *EMBO J.* **20**, 1875–1887 (2001).
28. Klein, M., Burla, B. & Martinoia, E. The multidrug resistance-associated protein (MRP/ABCC) subfamily of ATP-binding cassette transporters in plants. *FEBS Lett.* **580**, 1112–1122 (2006).
29. Brenner, S. *et al.* Gene expression analysis by massively parallel signature sequencing (MPSS) on microbead arrays. *Nat. Biotechnol.* **18**, 630–634 (2000).
30. Jofuku, K.D. & Goldberg, R.B. Kunitz trypsin inhibitor genes are differentially expressed during the soybean life cycle and in transformed tobacco plants. *Plant Cell* **1**, 1079–1093 (1989).
31. Belanger, F.C. & Kriz, A.L. Molecular characterization of the major maize embryo globulin encoded by the Glb1 gene. *Plant Physiol.* **91**, 636–643 (1989).
32. Lin, L., Ockenden, I. & Lott, J.N.A. The concentrations and distribution of phytic acid-phosphorus and other mineral nutrients in wild-type and *low phytic acid1–1* (*lpa1–1*) corn (*Zea mays* L.) grains and grain parts. *Can. J. Bot.* **83**, 131–141 (2005).
33. Preiss, J. Modulation of starch synthesis. in *A Molecular Approach to Primary Metabolism in Higher Plants* (eds. Foyer, C.H. and Quick, W.P.) 81–104 (Taylor and Francis, London, 1997).
34. Aalen, R.B. The transcripts encoding two oleosin isoforms are both present in the aleurone and in the embryo of barley (*Hordeum vulgare* L.) seeds. *Plant Mol. Biol.* **28**, 583–588 (1995).
35. Greenwood, J.S. & Bewley, J.D. Subcellular distribution of phytin in the endosperm of developing castor bean: a possibility for its synthesis in the cytoplasm prior to deposition within protein bodies. *Planta* **160**, 113–120 (1984).
36. Otegui, M.S., Capp, R. & Staehelin, L.A. Developing seeds of *Arabidopsis* store different minerals in two types of vacuoles and in the endoplasmic reticulum. *Plant Cell* **14**, 1311–1327 (2002).
37. Stevenson-Paulik, J., Bastidas, R.J., Chiou, S.T., Frye, R.A. & York, J.D. Generation of phytate-free seeds in *Arabidopsis* through disruption of inositol polyphosphate kinases. *Proc. Natl. Acad. Sci. USA* **102**, 12612–12617 (2005).
38. Brunner, S., Fengler, K., Morgante, M., Tingey, S. & Rafalski, A. Evolution of DNA sequence nonhomologies among maize inbreds. *Plant Cell* **17**, 343–360 (2005).
39. Ishida, Y. *et al.* High efficiency transformation of maize (*Zea mays* L.) mediated by *Agrobacterium tumefaciens*. *Nat. Biotechnol.* **14**, 745–750 (1996).

© 2007 Nature Publishing Group http://www.nature.com/naturebiotechnology

40. Christensen, A.H., Sharrock, R.A. & Quail, P.H. Maize polyubiquitin genes: structure, thermal perturbation of expression and transcript splicing, and promoter activity following transfer to protoplasts by electroporation. *Plant Mol. Biol.* **18**, 675–689 (1992).
41. An, G. *et al.* Functional analysis of the 3′ control region of the potato wound-inducible proteinase inhibitor II gene. *Plant Cell* **1**, 115–122 (1989).
42. Belanger, F.C. & Kriz, A.L. Molecular basis for allelic polymorphism of the maize Globulin-1gene. *Genetics* **129**, 863–872 (1991).
43. Zhao, Z.Y. *et al.* High throughput genetic transformation mediated by *Agrobacterium tumefaciens* in maize. *Mol. Breed.* **8**, 323–333 (2001).
44. Damude, H.G. *et al.* Identification of bifunctional delta12/omega3 fatty acid desaturases for improving the ratio of omega3 to omega6 fatty acids in microbes and plants. *Proc. Natl. Acad. Sci. USA* **103**, 9446–9451 (2006).
45. Heppard, E.P., Kinney, A.J., Stecca, K.L. & Miao, G.H. Developmental and growth temperature regulation of two different microsomal omega-6 desaturase genes in soybeans. *Plant Physiol.* **110**, 311–319 (1996).
46. Finer, J. & McMullen, M. Transformation of soybean via particle bombardment of embryogenic suspension culture tissue. *In Vitro Cell. Dev. Biol.* **27**, 175–182 (1991).

© 2007 Nature Publishing Group http://www.nature.com/naturebiotechnology

Copyright of Nature Biotechnology is the property of Nature Publishing Group and its content may not be copied or emailed to multiple sites or posted to a listserv without the copyright holder's express written permission. However, users may print, download, or email articles for individual use.